MAYTONI
DECORATIVE LIGHTING

Track Lighting Accessory TRX001-112W

Series: Busbar trunkings Unity Article: TRX001-112W

PROPERTIES

Lamp type: ..... Surface/suspension busbur trunking

Height, mm: 20

ADDITIONAL

IP: IP20

Width, mm: 34

Base material: ..... Aluminum

2in1: ..... No

LED: ..... No

Length, mm: 2000

Bulbs incl.: ..... No

Barcode: 4251110061122

Package volume, m3: 0.0014

Net weight, kg: 0.75

Place type: ..... Dressing Room

Accessories: ..... ,
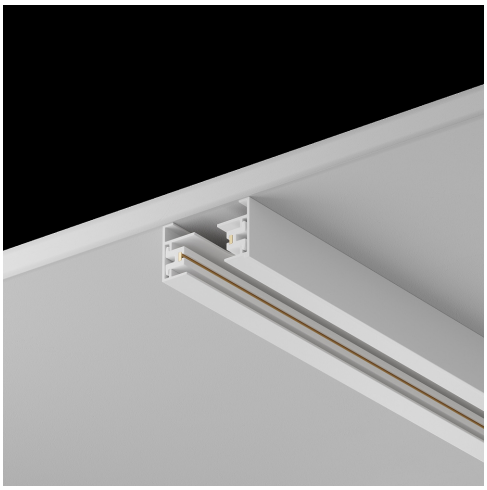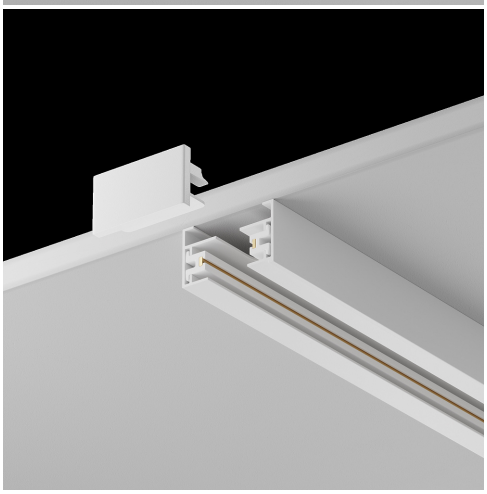
Warranty: 2