MAYTONI
DECORATIVE LIGHTING

Track Lighting TR004-1-GU10-W

Series: Focus Article: TR004-1-GU10-W

PROPERTIES

Lamp type: ..... Track Lighting
Height, mm: 210
Bulbs: ..... (50W)
Diameter, mm: 60

ADDITIONAL
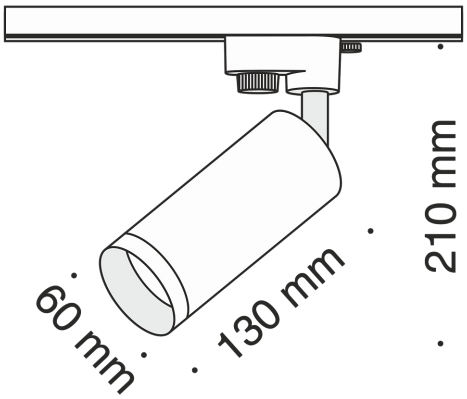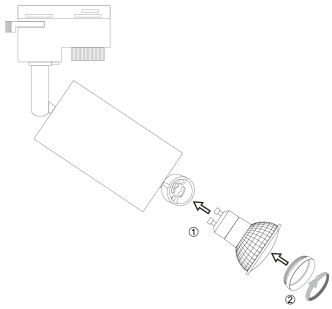
Lamp power: 50
VOLTAGE: ..... AC220_240
IP: IP20
Light Socket: GU10
Base material: ..... Aluminum
2in1: ..... No
LED: ..... No
Length, mm: 130
Bulbs incl.: ..... No
Barcode: 4251110099194
Package volume, m3: 0.001504
Net weight, kg: 0.3
Place type: ..... Dressing Room
Warranty: 3