MAYTONI
DECORATIVE LIGHTING

Track Lighting Points Rot

Series: Points Rot Article: TR015-2-10W3K-B

PROPERTIES

Lamp type: ..... Track Lighting
Height, mm: 135

ADDITIONAL
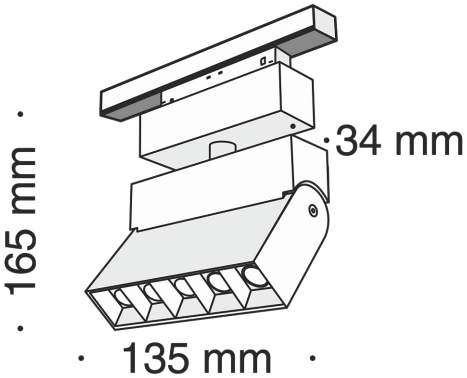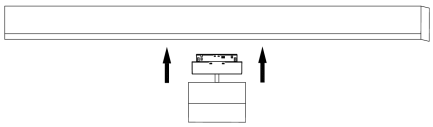
Lamp power: 10
VOLTAGE: DC48
IP: IP20
Luminous Flux, Lm: 700
Color Temperature, K: 3000
Scattering Angle, Degree: 24
Maximum lamp power, W: 10
Width, mm: 34
Base material: ..... Aluminum
2in1: ..... No
LED: ..... Yes
Length, mm: 175
Bulbs incl.: ..... No
Barcode: 4251110096292
Color Rendering Index, RA: 90
Package volume, m3: 0.001693
Net weight, kg: 0.52
Warranty: 3