MAYTONI
DECORATIVE LIGHTING

Ceiling lamp Onda

Series: Onda Article: C024CL-L12B3K

PROPERTIES

Lamp type: ..... Ceiling lamp
Height, mm: 80
Diameter, mm: 85

ADDITIONAL
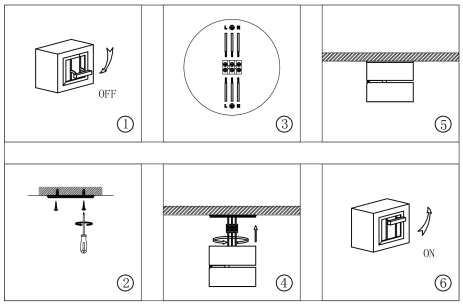
Lamp power: 12
VOLTAGE: ..... AC220_240
IP: IP20
Luminous Flux, Lm: 650
Color Temperature, K: 3000
Scattering Angle, Degree: 120
Maximum lamp power, W: 12
Base material: ..... Aluminum
2in1: ..... No
LED: ..... Yes
Bulbs incl.: ..... No
Barcode: 4251110054032
Color Rendering Index, RA: 80
Package volume, m3: 1.9E-5
Net weight, kg: 0.37
Warranty: 3