MAYTONI
DECORATIVE LIGHTING

Track Lighting TR002-1-GU10-B

Series: Article: TR002-1-GU10-B

PROPERTIES

Lamp type: ..... Track Lighting
Height, mm: 179
Min Height, mm: 179
Max Height, mm: 179
Bulbs: ..... (50W)

ADDITIONAL
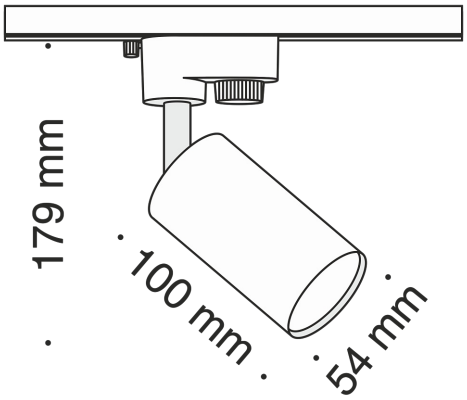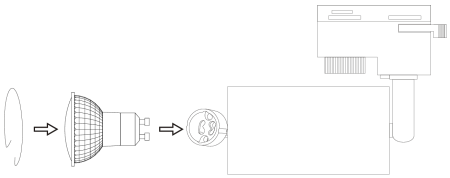
Lamp power: 50
VOLTAGE: ..... AC220_240
IP: IP20
Light Socket: GU10
Width, mm: 54
Base material: ..... Aluminum
2in1: ..... No
LED: ..... No
Length, mm: 100
Bulbs incl.: ..... No
Barcode: 4251110080895
Package volume, m3: 0.0018
Net weight, kg: 0.18
Place type: ..... Dressing Room
Warranty: 2