MAYTONI
DECORATIVE LIGHTING

Wall lamp Marmo

Series: Marmo Article: MOD099WL-01G

PROPERTIES

Lamp type: ..... Wall lamp
Height, mm: 480
Bulbs: ..... (40W)
Ceiling mount type: ..... Plank

PLAFOND / LAMPSHADE

Lampshade Colour: ..... White

ADDITIONAL
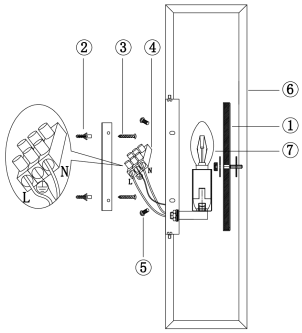
Light Socket: E14
Lamp power: 40
VOLTAGE: ..... AC220_240
Width, mm: 190
Base material: ..... Metal
2in1: ..... No
LED: ..... No
Length, mm: 120
Bulbs incl.: ..... No
Barcode: 4251110028156
IP: IP20
Package volume, m3: 0.011648
Net weight, kg: 1.2
Warranty: 2