MAYTONI
DECORATIVE LIGHTING

Wall lamp Wonderland

Series: Wonderland Article: MOD313WL-01G

PROPERTIES

Lamp type: ..... Wall lamp
Height, mm: 184
Bulbs: ..... (60W)
Ceiling mount type: ..... Plank

ADDITIONAL
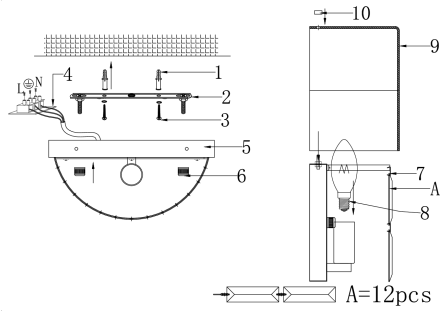
Light Socket: E14
Lamp power: 60
VOLTAGE: ..... AC220_240
Width, mm: 260
Base material: ..... Stainless steel
2in1: ..... No
LED: ..... No
Length, mm: 130
Bulbs incl.: ..... No
Barcode: 4251110033228
IP: IP20
Package volume, m3: 0.038626
Net weight, kg: 2.11
Warranty: 2