MAYTONI
DECORATIVE LIGHTING

Backlight Epic

Series: Epic Article: MIR009WL-L12CH4K

PROPERTIES

Lamp type: ..... Backlight
Height, mm: 55
Bulbs: 1

ADDITIONAL
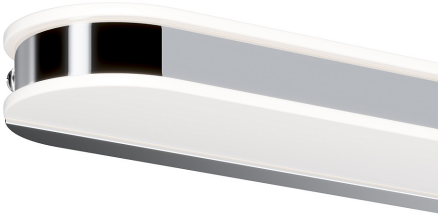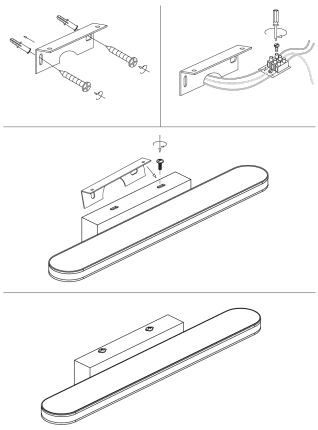
Maximum lamp power, W: 12
Lamp power: 12
VOLTAGE: ..... AC85_265
Width, mm: 600
Base material: ..... Metal and acrylic
2in1: ..... No
LED: ..... Yes
Length, mm: 85
Bulbs incl.: ..... No
Barcode: 4251110028194
IP: IP20
Luminous Flux, Lm: 650
Color Temperature, K: 4000
Scattering Angle, Degree: 120
Color Rendering Index, RA: 80
Package volume, m3: 0.01005
Net weight, kg: 0.81
Warranty: 3