MAYTONI
DECORATIVE LIGHTING

Wall lamp Facet

Series: Facet Article: MOD094WL-01G

PROPERTIES

Lamp type: ..... Wall lamp
Height, mm: 250
Bulbs: ..... (60W)
Ceiling mount type: ..... Plank

ADDITIONAL
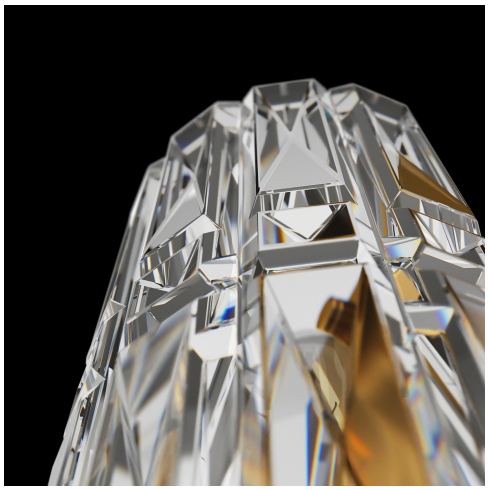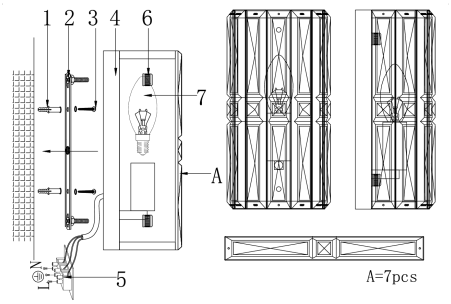
Light Socket: E14
Lamp power: 60
VOLTAGE: ..... AC220_240
Width, mm: 130
Base material: ..... Metal
2in1: ..... No
LED: ..... No
Length, mm: 100
Bulbs incl.: ..... No
Barcode: 4251110099699
IP: IP20
Package volume, m3: 0.014586
Net weight, kg: 1.51
Warranty: 2