PHILIPS

LED Floodlight

BVP167

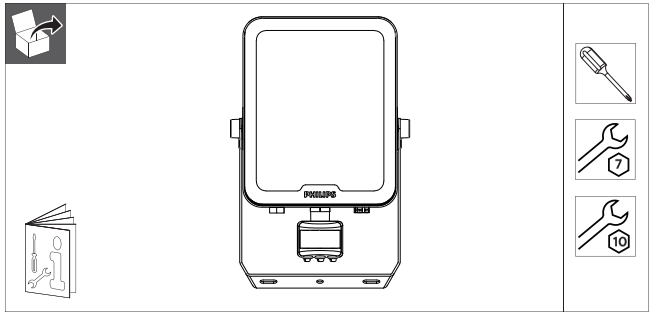

outdoor | 220V 240V | 50Hz 60Hz | IP65 | RG=1 | Max. 40 °C Min. -25 °C | Ta 25 °C

	Flux (lm)	CCT (K)	Power (W)	Energy efficiency class of light source	Beam angle	m²	kg
BVP167 LED12/830_40_65 DOB 10W SWB MDU	1100 1200 1200	3000 4000* 6500	10	E	100° ~ 120°	0.006	0.30
BVP167 LED24/830_40_65 DOB 20W SWB MDU	2200 2400 2400	3000 4000* 6500	20	E		0.009	0.34
BVP167 LED36/830_40_65 DOB 30W SWB MDU	3300 3600 3600	3000 4000* 6500	30	E		0.017	0.60
BVP167 LED60/830_40_65 DOB 50W SWB MDU	5500 6000 6000	3000 4000* 6500	50	E		0.028	0.86
BVP167 LED84/830_40_65 DOB 70W SWB MDU	7700 8400 8400	3000 4000* 6500	70	E		0.038	1.41

*:default setting.

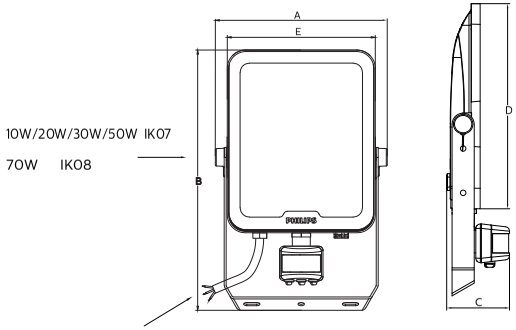

	10W	20W	30W	50W	70W
A	85	97	133	173	203
B	162	181	220	264	293
C	56	56	56	57	57
D	90	109	145	185	215
E	70	82	117	150	175
a	41	50	70	90	110
b	51	60	85	110	130
c	4.2	4.2	4.5	6.5	6.5
d	4.2	4.2	4.5	6.5	6.5

> 0m

10W/20W/30W/50W 1000mm
70W 2000mm

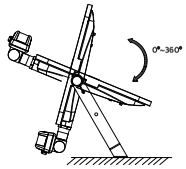

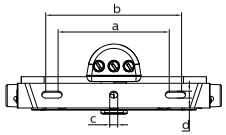

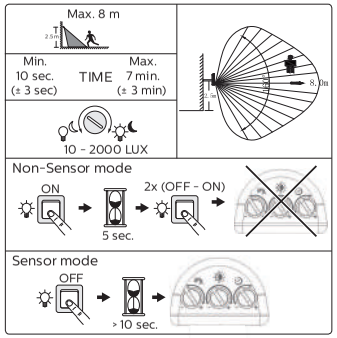

© 2024 signify Holding.All rights reserved

Data subject to change without notice
Keep for future reference: **www.philips.com/lighting**

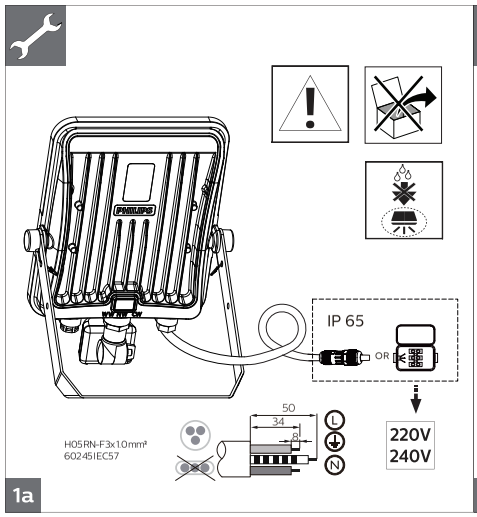

1a

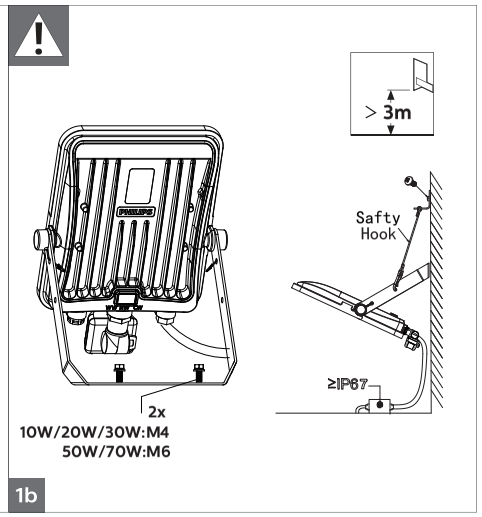

1b

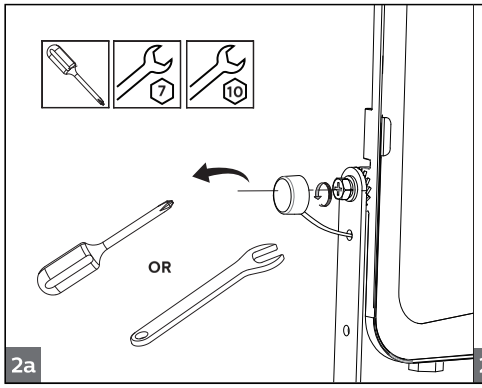

2a

	10W	20W	30W	50W	70W
Torque(Nm)	2	2	2	8	8

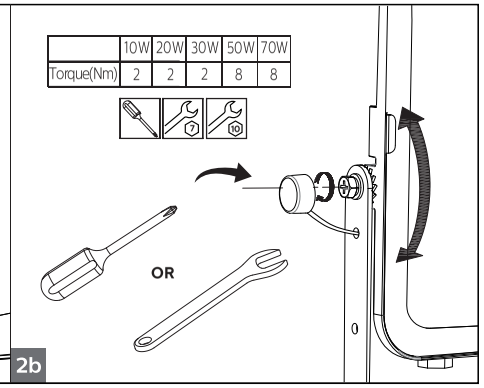

2b

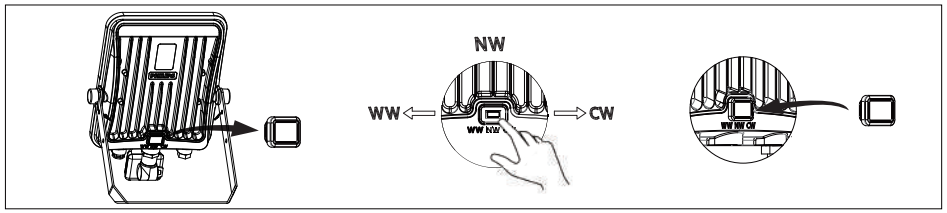

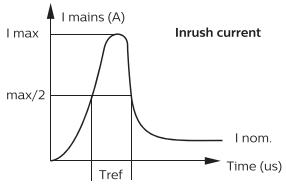
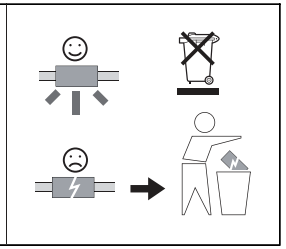
	10W	20W	30W	50W	70W
Imax (A)	0.78	1.1	1.22	1.68	3.64
Tref (µs)	6.48	7.4	8.2	8.2	22.2
MCB	Floodlight Max.				
B-10 A	136	68	46	27	19
B-16 A	218	109	73	43	31
C-10 A	159	79	53	31	23
C-16 A	254	127	86	50	36